Project Sentinel

UA Innovate

Fullstack Prompt

Stephanie Bittner
Hannah Hazelwood

February 28 - March 1, 2026

Contents

- Who We Are
- The System Overview
- Live Demo
- Intelligence & Security
- Form, Redaction, and LLM Logic
- Q&A

Who We Are

Stephanie Bittner

Hannah Hazelwood

The System Overview

High-level Architecture

	Frontend	Backend	
Languages	HTML, JS, CSS	python	Language
Framework	React	FastAPI	Framework
Build Tool	Vite	PostgreSQL	Database
Styling System	Tailwind CSS	uvicorn	ASGI Web Server
Libraries	Recharts, Radix UI	Sqlmodel, Polars, Statsmodels, OpenAI API	Libraries

The System Overview

High-level Architecture

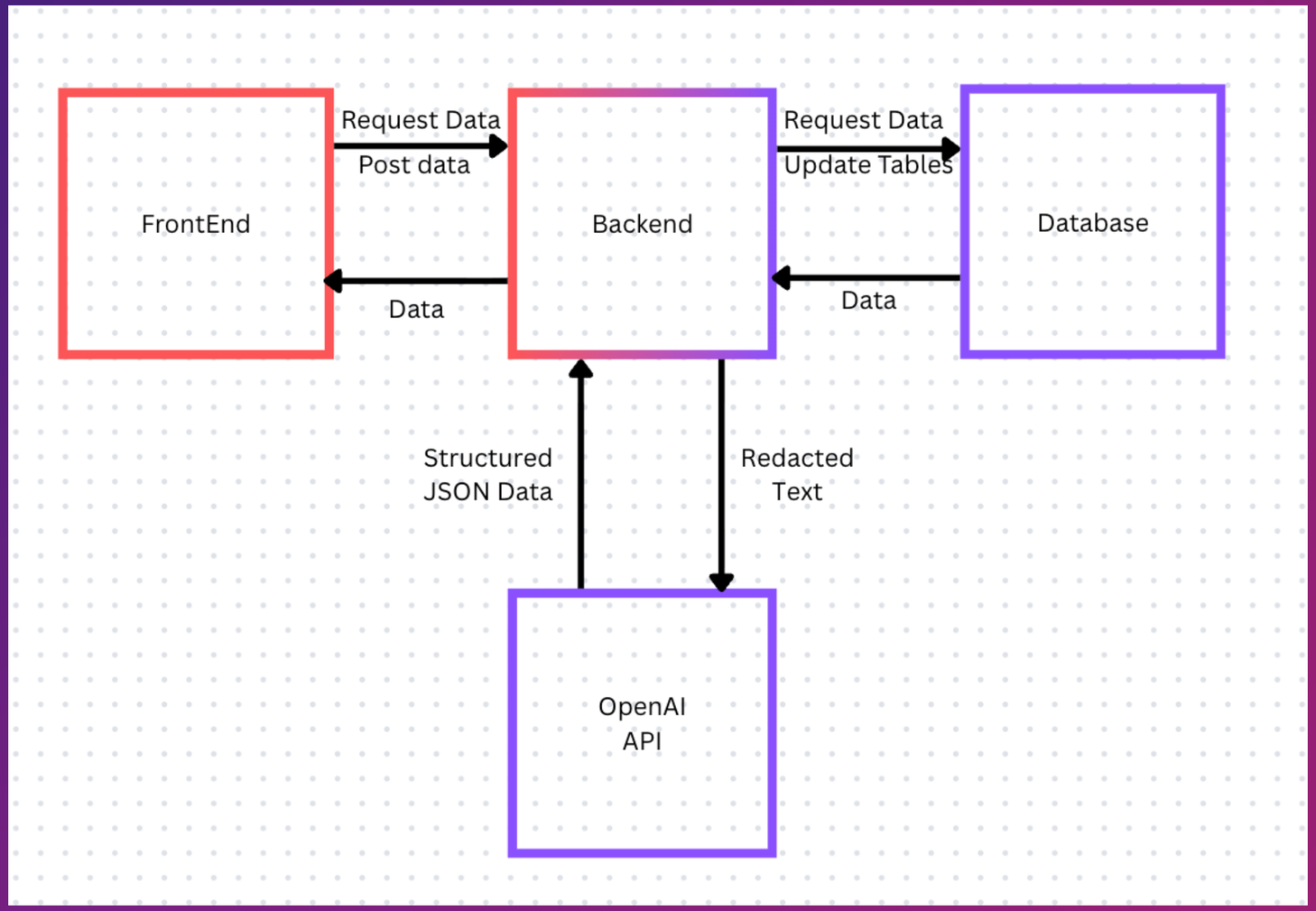

Live Demo

Intelligence & Security

ML Forecast

Utilize StatsModels for basic OLS Regression

20 most recent entries

Snap Logic: Do not include entries before snap

PII Redaction

View Logs (Dashboard Modal)

```
INFO:     127.0.0.1:49857 - "OPTIONS /Form HTTP/1.1" 200 OK
INFO:     127.0.0.1:49857 - "POST /Form HTTP/1.1" 307 Temporary Redirect
INFO:     127.0.0.1:49859 - "OPTIONS /Form/ HTTP/1.1" 200 OK
Just a heads up, Avengers Compound is out of Pym Particles. This is [REDACTED], call
me back at [REDACTED].
Inside LLM_Handler, using Just a heads up, Avengers Compound is out of Pym Particles.
 This is [REDACTED], call me back at [REDACTED].
Calling LLM...
LLM Success
INFO:     127.0.0.1:49857 - "POST /Form/ HTTP/1.1" 201 Created
INFO:     127.0.0.1:49857 - "GET /LiveIntelligenceReports/Sokovia HTTP/1.1" 200 OK
```

Form, Redaction, and LLM Logic

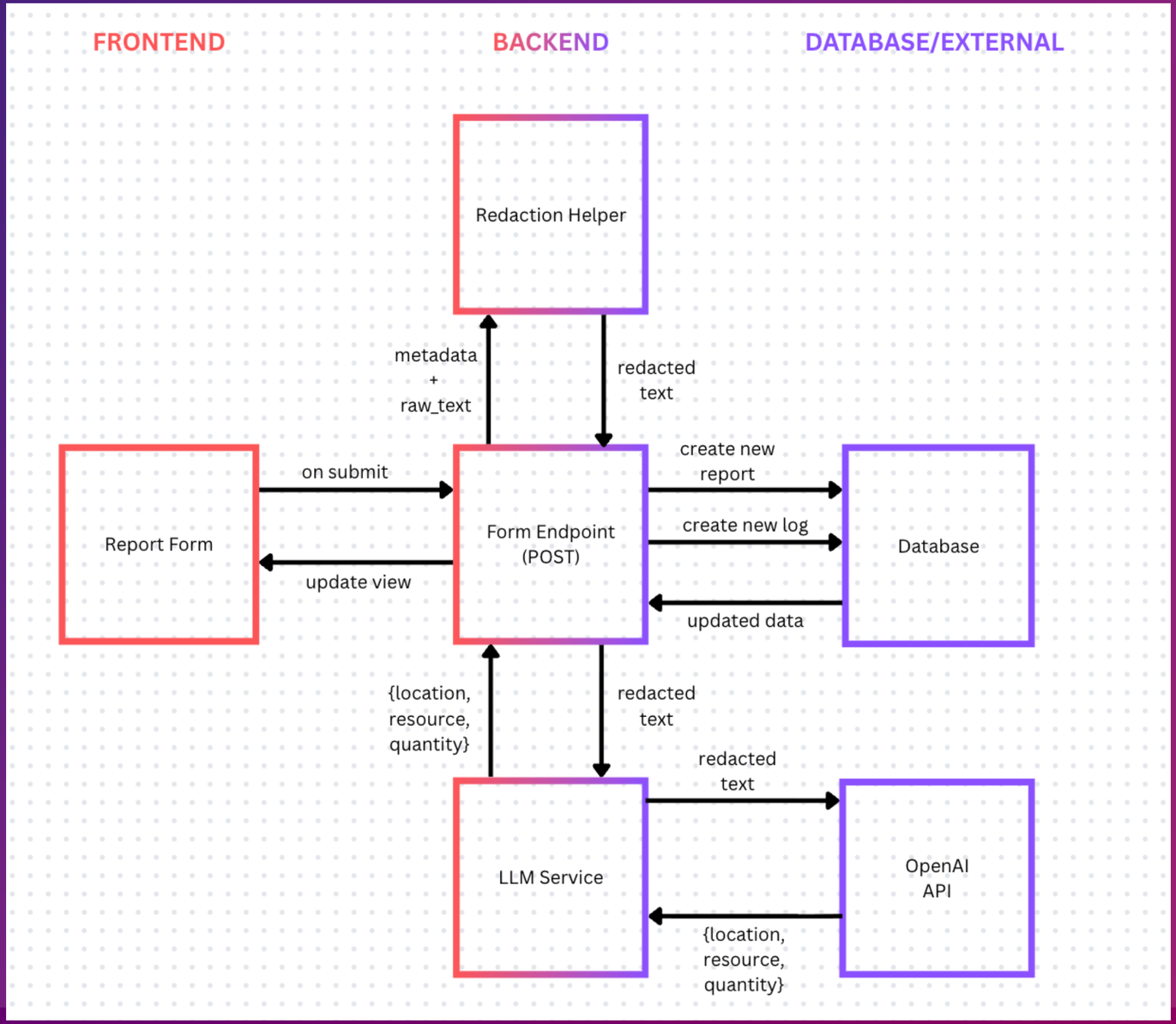

Questions?

Github:

https://github.com/hhaze2/UAInnovate2026